ψ-Field Energy Coupling and Power Transfer Networks

Inventor: Gary Thomas Alcock

October 11, 2025

Cross-Reference to Related Applications

Pursuant to 35 U.S.C. §119(e), this application claims the benefit of the following U.S. provisional applications, the entirety of each being incorporated herein by reference:

- U.S. Provisional App. No. **63/865,279** (Confirmation No. 5785), filed **Aug. 16, 2025**, entitled *Systems and Methods Using Density Field Dynamics for Gravitational and Signal Correction.*
- U.S. Provisional App. No. **63/865,283** (Confirmation No. 5905), filed **Aug. 16, 2025**, entitled *Systems and Methods Using Density Field Dynamics for Energy Transmission.*
- U.S. Provisional App. No. **63/865,293** (Confirmation No. 6649), filed **Aug. 16, 2025**, entitled *Systems and Methods Using Density Field Dynamics for Information Processing, Communication, and Advanced Computing.*
- U.S. Provisional App. No. **63/868,073** (Confirmation No. 8739), filed **Aug. 21, 2025**, entitled *Methods, Systems, and Apparatus for Artificial Generation, Control, and Application of Scalar Density Fields.*
- U.S. Provisional App. No. **63/893,633** (Confirmation No. 5179), filed **Oct. 4, 2025**, entitled *Systems and Methods for Electromagnetic Coupling, Actuation, and Application of Scalar Refractive Fields.*

This application also incorporates by reference, in their entirety for all purposes, **all other provisional and non-provisional applications filed by the same inventor on or after August 15, 2025**, including any continuations, divisionals, or continuations-in-part thereof. The foregoing applications are incorporated by reference in their entirety for all purposes, including definitions, figures, and embodiments. To the extent of any inconsistency, the present disclosure controls.

Statement Regarding Federally Sponsored Research or Development

No federal funding was used in connection with the inventions described herein. No government rights apply.

Incorporation by Reference (Additional Materials)

In addition to the applications identified above, technical materials authored by the inventor concerning scalar refractive field (ψ) dynamics, cavity–atom LPI tests, navigation/timing corrections, energy coupling, communication architectures, and quantum control are incorporated by reference. All essential material for the claimed inventions is included explicitly herein; incorporated materials are provided for background and alternative implementations.

Definitions; Conventions

As used herein, "comprising" is open-ended and does not exclude additional elements or steps; "including" and "having" are used in a like manner. Numerical ranges include all sub-ranges and individual values unless otherwise specified. Singular terms include the plural and vice versa unless context dictates otherwise. Functional descriptions are supported by the corresponding structures, algorithms, and examples disclosed herein; no limitation to "means-plus-function" under 35 U.S.C. §112(f) is intended unless expressly recited. Throughout, the scalar refractive field is denoted ψ, with optical index $n = e^{\psi}$ where applicable.

No Admission

Any discussion of references, techniques, or prior work in the Background is provided solely for context and is not an admission that any such material constitutes prior art, is known, conventional, or required.

Abstract

Disclosed are systems and methods for efficient transfer of energy through engineered scalar refractive fields (ψ) that form steerable corridors of reduced effective phase velocity $c_1 = c\,e^{-\psi}$ and controlled optical index $n = e^{\psi}$. A transmitter generates a shaped ψ envelope that guides power to a receiver via refractive confinement and impedance-matched coupling. Metamaterial arrays provide dynamic beam steering, lane multiplexing, and adaptive focusing, while closed-loop control maintains safety and minimizes spurious electromagnetic (EM) emission. Applications include wireless power delivery, vehicle/airframe charging, deep-space energy beaming, and resilient microgrid interconnects.

Field of the Invention

The invention relates to wireless power transfer, guided-wave energy delivery, and metamaterial beamforming. More particularly, it concerns generation, steering, and impedance-matched coupling of a scalar refractive field (ψ) to create low-loss corridors for energy transport.

Background

Conventional wireless power relies on near-field inductive/capacitive coupling or far-field EM radiation, each with trade-offs in distance, alignment, and safety. There is no architecture that creates reconfigurable, refractive *corridors* through which energy preferentially flows, with beam-like directionality and suppressed spillover. The ψ framework enables phase-velocity engineering of space, forming energy lanes that can be dynamically routed and impedance matched to diverse loads.

Summary

A ψ *power network* comprises a transmitter that synthesizes a shaped ψ corridor, a receiver with a ψ-responsive coupler/rectifier, and a supervisory controller. The transmitter uses parametric ψ resonators and metamaterial panels (cf. #2) to project steerable envelopes. Receivers achieve high capture efficiency via conjugate-matched ψ/EM hybrid couplers and rectification. Real-time sensing enforces exclusion zones and adjusts power, phase, and beam paths for safety and efficiency.

Representative Claims

1. Apparatus for ψ-guided energy transfer, comprising: (i) a ψ generator configured to produce a spatially confined corridor of modified refractive index $n = e^{\psi}$; (ii) a power source coupled to the ψ generator; and (iii) a receiver including a ψ-responsive coupler impedance matched to the corridor, whereby energy is transferred with higher end-to-end efficiency than in absence of the corridor.
2. Metamaterial ψ beamformer, comprising an array of time-modulated unit cells driven to provide distributed parametric gain and programmable phase, the array steering a ψ corridor toward a receiver and supporting simultaneous multi-lane delivery.
3. Method of ψ impedance matching, comprising: (a) estimating a complex transfer function of a ψ corridor; (b) computing a conjugate match for a receiver load; and (c) adjusting receiver coupling depth and phase to maximize captured power subject to safety thresholds.
4. Safety control, wherein a controller monitors environmental sensors and EM monitors to enforce dynamic keep-out volumes and automatically reduce or redirect ψ power upon detection of intrusion, misalignment, or elevated EM emission.

Brief Description of the Drawings

Fig. 1: System overview—transmitter, steerable ψ corridor, and receiver.
Fig. 2: Metamaterial beamformer creating multiplexed ψ lanes.
Fig. 3: Illustrative link budget—captured power vs. range and alignment.
Fig. 4: Matching and safety control—impedance loop and guard logic.

Detailed Description

Definitions

A ψ *corridor* is a spatial domain where the effective index $n = e^{\psi}$ is shaped to guide energy from a source to a receiver with reduced lateral leakage. A ψ*-responsive coupler* is a structure whose capture efficiency increases with local ψ gradient magnitude $|\nabla\psi|$ and phase alignment.

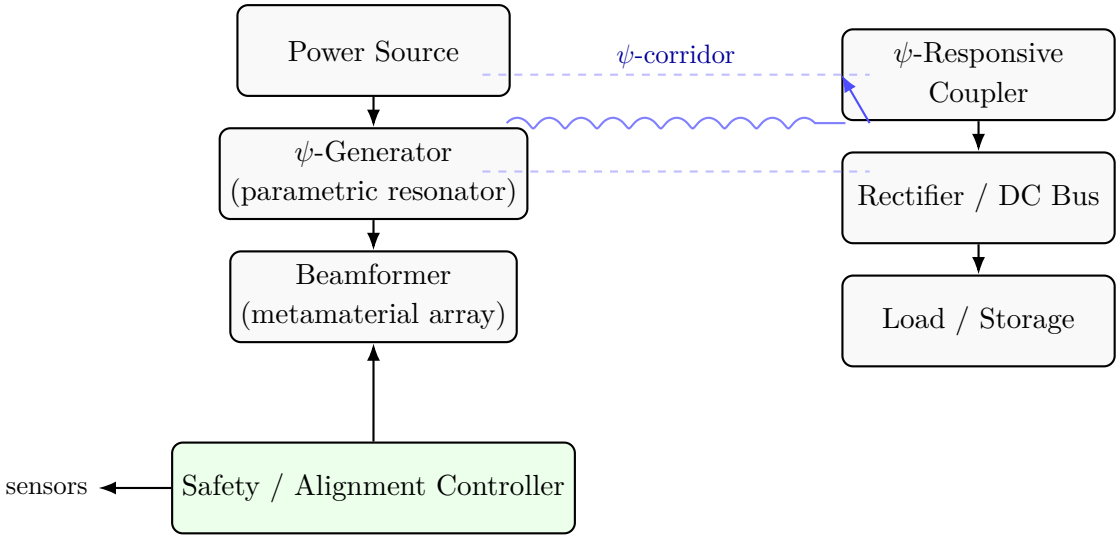

Figure 1: System overview: a transmitter projects a steerable ψ-corridor toward a receiver with a ψ-responsive coupler and rectifier, under safety/alignment control.

Transmitter Architecture

The transmitter uses a parametric ψ resonator network (drive near $2\Omega_\psi$) feeding a metamaterial panel to form a corridor. Phase and amplitude across the panel set the lane direction, width, and focal depth. A supervisory controller maintains phase lock and regulates power.

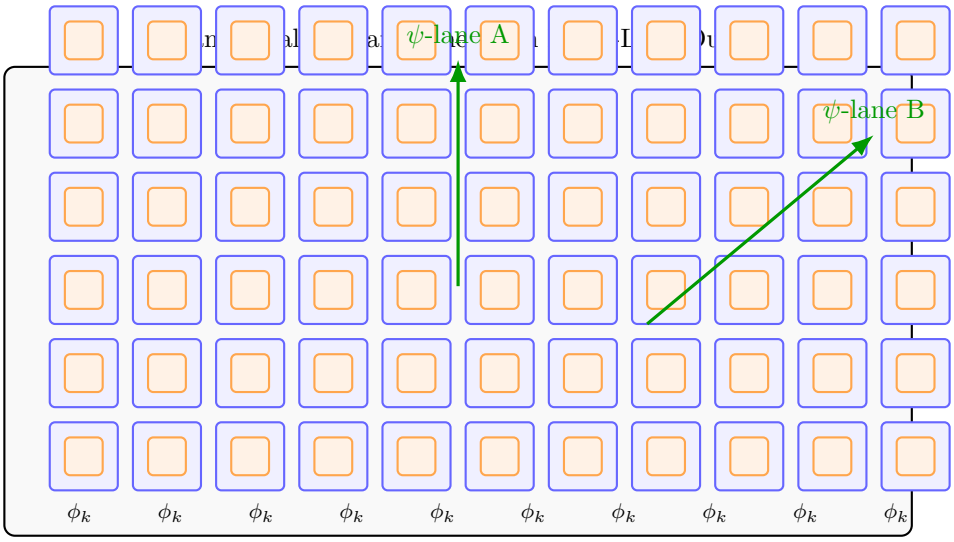

Figure 2: Metamaterial array with time-modulated unit cells forms multiple steerable ψ lanes simultaneously via programmed phase set $\{\phi_k\}$.

Receiver Architecture and Matching

A receiver hosts a ψ-responsive coupler (e.g., compact cavity, LC ladder, or metasurface) co-designed with the corridor profile. An adaptive matching network maximizes captured power while keeping EM emissions within limits. Rectification and storage feed downstream loads or buses.

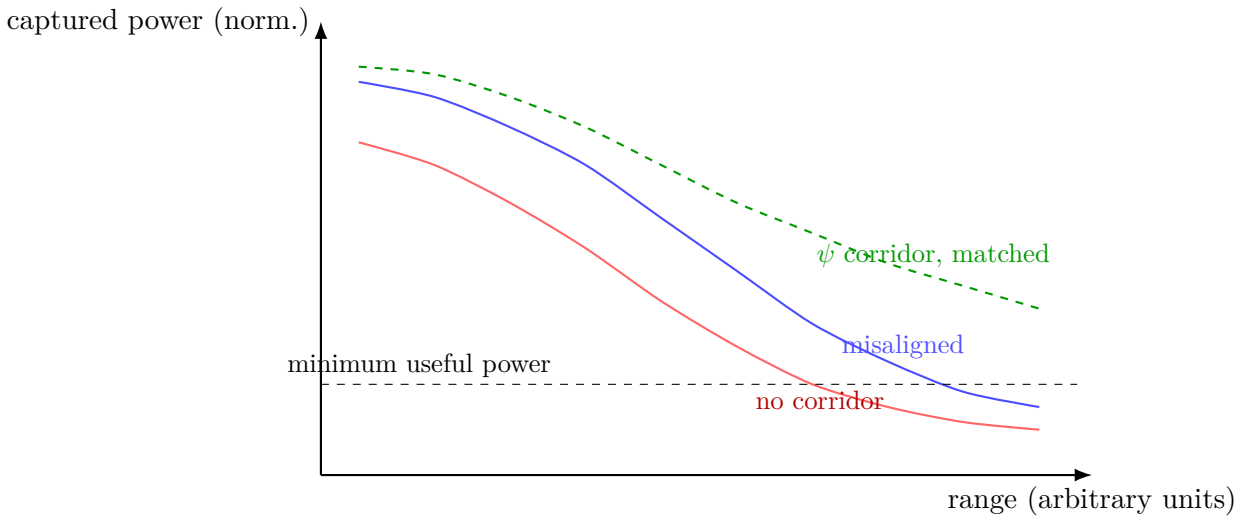

Figure 3: Illustrative link budget: captured power vs. range. A matched ψ corridor maintains higher transfer with graceful roll-off; misalignment or no corridor reduces efficiency.

Safety and Control

Safety logic enforces dynamic keep-out volumes, monitors EM spillover, and clamps power or redirects lanes. Alignment sensors (vision/LiDAR/RF tags) close the loop with the beamformer and matching network.

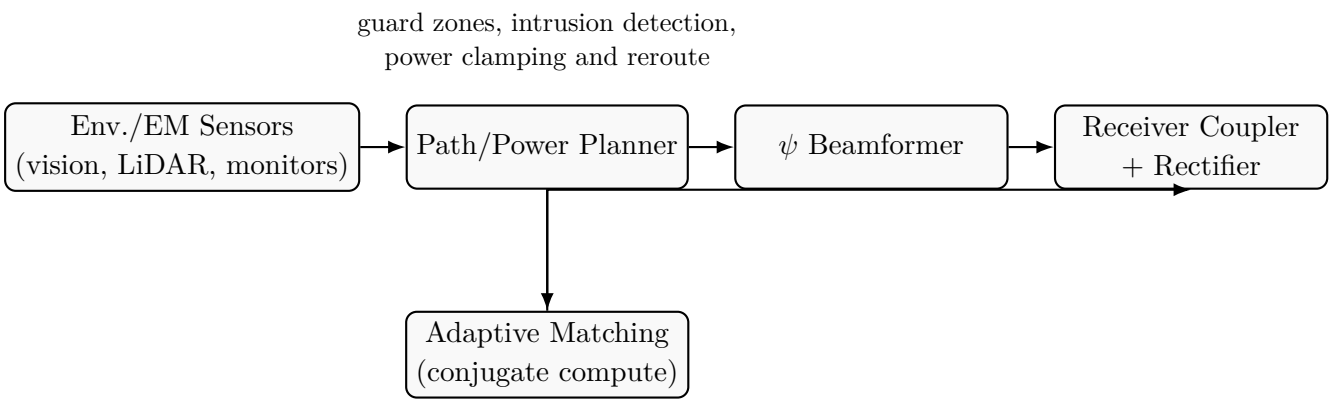

Figure 4: Control stack: sensors feed a planner that enforces safety and alignment; an adaptive matcher optimizes capture while the ψ beamformer routes energy lanes.

Alternative Embodiments

(i) Airborne/spaceborne relays forming long-range ψ chains; (ii) Bidirectional corridors for power and low-loss timing; (iii) Corridors embedded in infrastructures (roads, rails, pads) for dynamic charging; (iv) Multi-band operation with lane aggregation and handoff; (v) Hybrid ψ/EM couplers for compatibility with legacy loads.

Industrial Applicability

Applicable to logistics, aviation, maritime, off-grid microgrids, lunar/planetary surface power beaming, and resilient disaster recovery energy delivery.

Conclusion

Engineered scalar refractive corridors enable efficient, steerable, and safe energy transfer. By combining parametric ψ generation, metamaterial beamforming, adaptive matching, and safety governance, the disclosed networks deliver practical wireless power with superior directionality and controllability compared to conventional EM-only approaches.